RAISED PATIO PLANTER CUTTING LIST

CUTTING LIST

		QT.	PART		T	W	L
BASE	A	6	legs	(treated pine)	3 1/2	3 1/2	35
	B	2	rails	(treated pine)	1 1/2	5 1/2	66 1/4
	C	4	cross rails	(treated pine)	1 1/2	3 1/2	12
	D	2	end panels	(treated plywood)	3/4	22	22
	E	2	front/back panels	(treated plywood)	3/4	22	67 3/4
	F	2	hinge rail	(treated pine)	1 1/2	3 1/2	27 7/8
	G	12	slats	(treated pine)	1	5 1/2	21 7/8
TRIM	H	5	lower slats	(cedar)	3/4	1 1/2	64 1/4
	I	10	lower end slats	(cedar)	3/4	1 1/2	20
	J	8	end slats	(cedar)	3/4	5 1/2	23 1/2
	K	8	front slats	(cedar)	3/4	5 1/2	69 1/4
	L	2	front/back caps	(cedar)	3/4	1 1/2	69 1/4
	M	2	side caps	(cedar)	3/4	1 1/2	22
DOORS	N	10	door slats	(cedar)	3/4	1 1/2	31 5/8
	O	4	door cleats	(cedar)	3/4	3 1/2	11 1/2
	P	4	hinge cleats	(cedar)	3/4	1 1/2	4 3/4

LOWE'S creative ideas FOR HOME AND GARDEN

RAISED PATIO PLANTER CUTTING DIAGRAM

CUTTING DIAGRAM

(2) - 3 1/2-in x 3 1/2-in x 120-in (4 x 4 x 10) treated pine

(2) - 1 1/2-in x 5 1/2-in x 96-in (2 x 4 x 8) treated pine

1 1/2-in x 3 1/2-in x 120-in (2 x 4 x 10) treated pine

(3) - 1-in x 5 1/2-in x 96-in (1 x 6 x 8) treated pine

(5) - 3/4-in x 1 1/2-in x 96-in (1 x 2 x 8) cedar

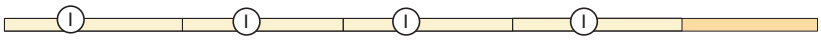

3/4-in x 1 1/2-in x 96-in (1 x 2 x 8) cedar

3/4-in x 1 1/2-in x 96-in (1 x 2 x 8) cedar

(8) - 3/4-in x 5 1/2-in x 96-in (1 x 6 x 8) cedar

(2) - 3/4-in x 1 1/2-in x 96-in (1 x 2 x 8) cedar

(2) - 3/4-in x 1 1/2-in x 96-in (1 x 2 x 8) cedar

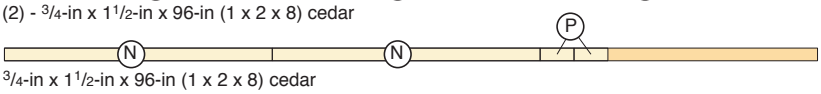

3/4-in x 1 1/2-in x 96-in (1 x 2 x 8) cedar

3/4-in x 3 1/2-in x 96-in (1 x 4 x 8) cedar

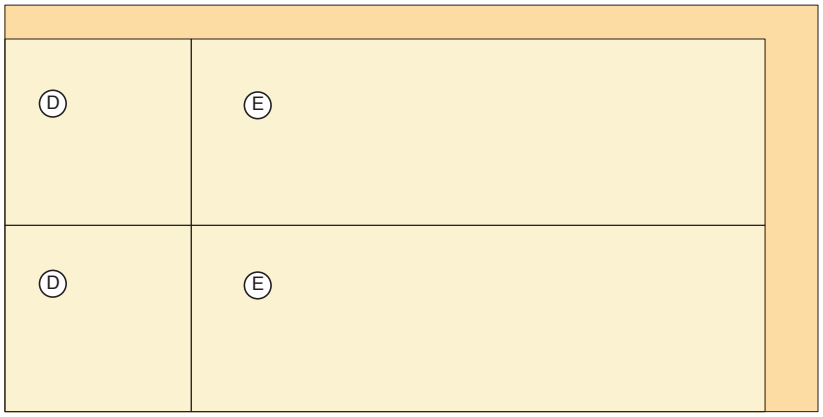

3/4-in x 48-in x 96-in treated plywood

LOWE'S creative ideas FOR HOME AND GARDEN

RAISED PATIO PLANTER PROJECT DIAGRAM

DRAWING 1
Base Frame

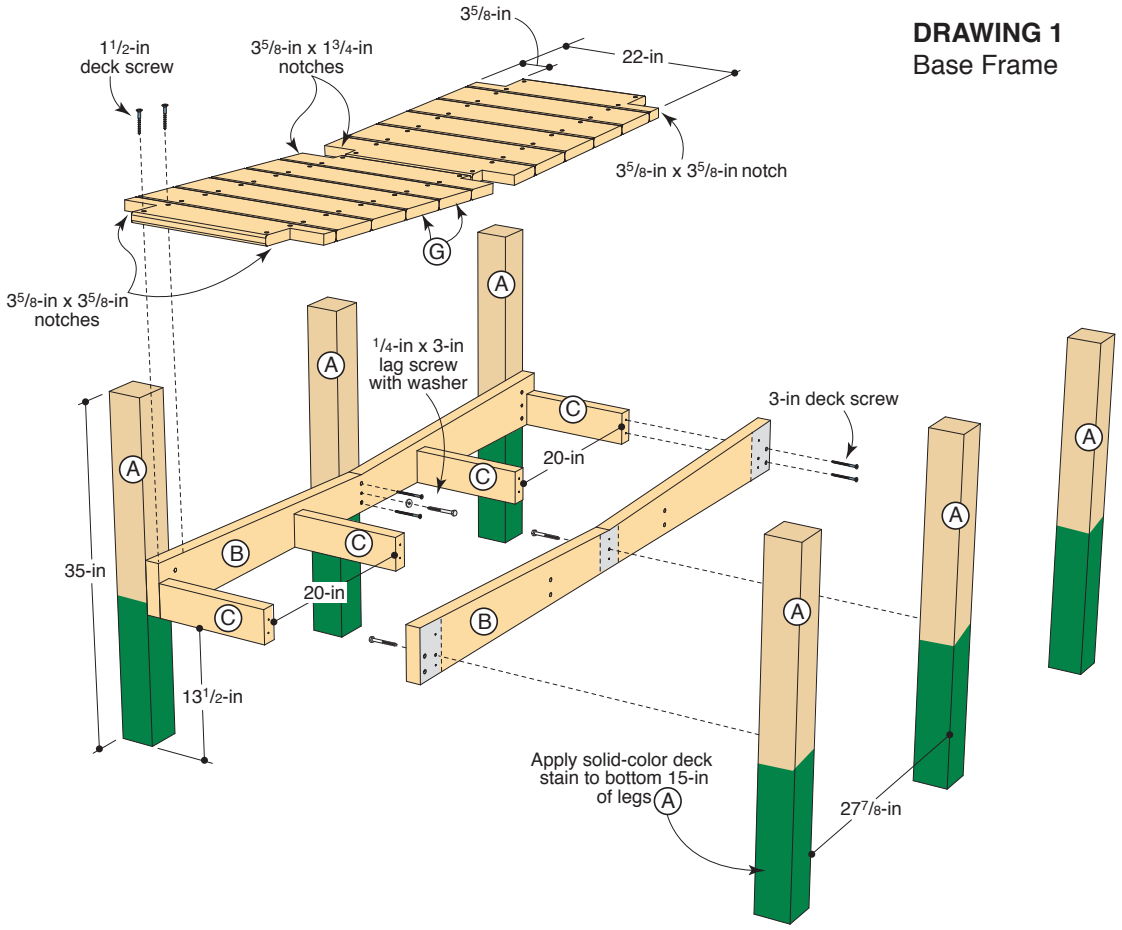

DRAWING 2
Rail Pattern

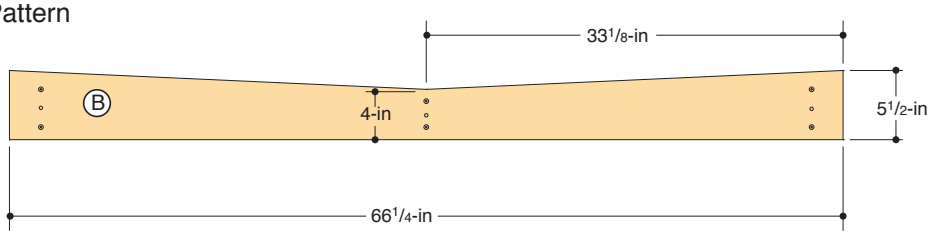

LOWE'S creative ideas FOR HOME AND GARDEN

RAISED PATIO PLANTER PROJECT DIAGRAM

DRAWING 3
Box Sides

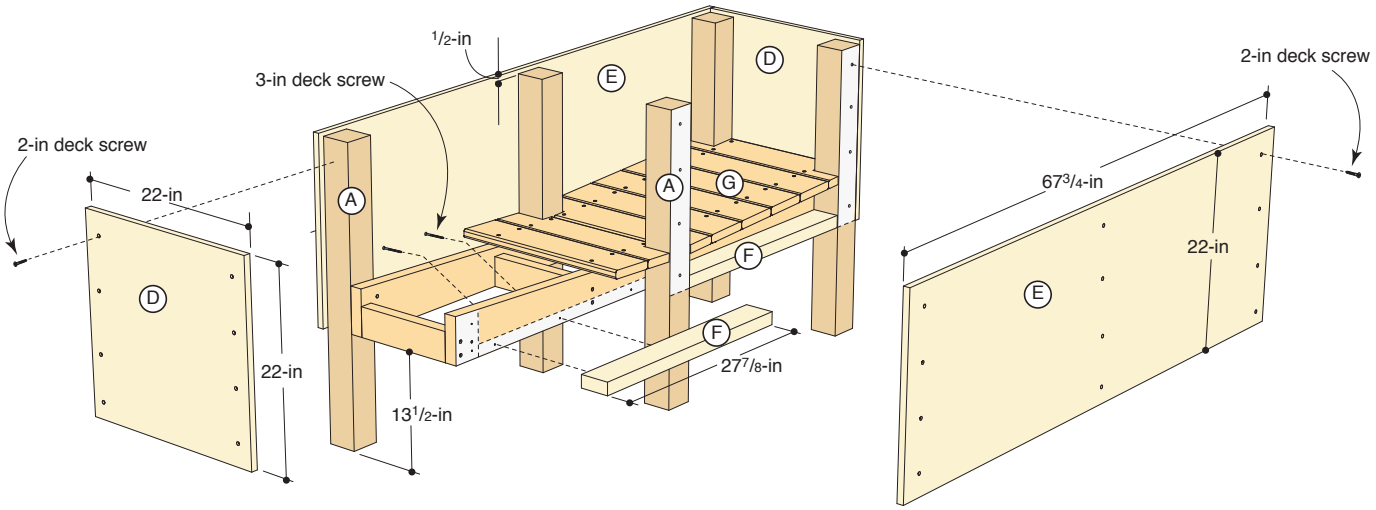

DRAWING 4
Bottom Slat Spacing

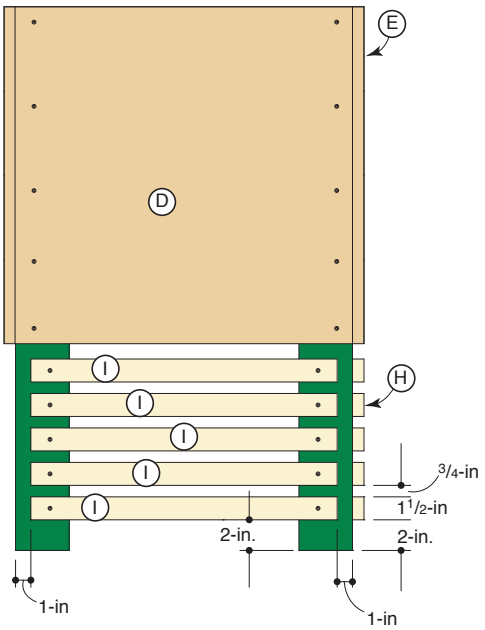

LOWE'S creative ideas FOR HOME AND GARDEN

RAISED PATIO PLANTER PROJECT DIAGRAM

DRAWING 5
Trim Placement

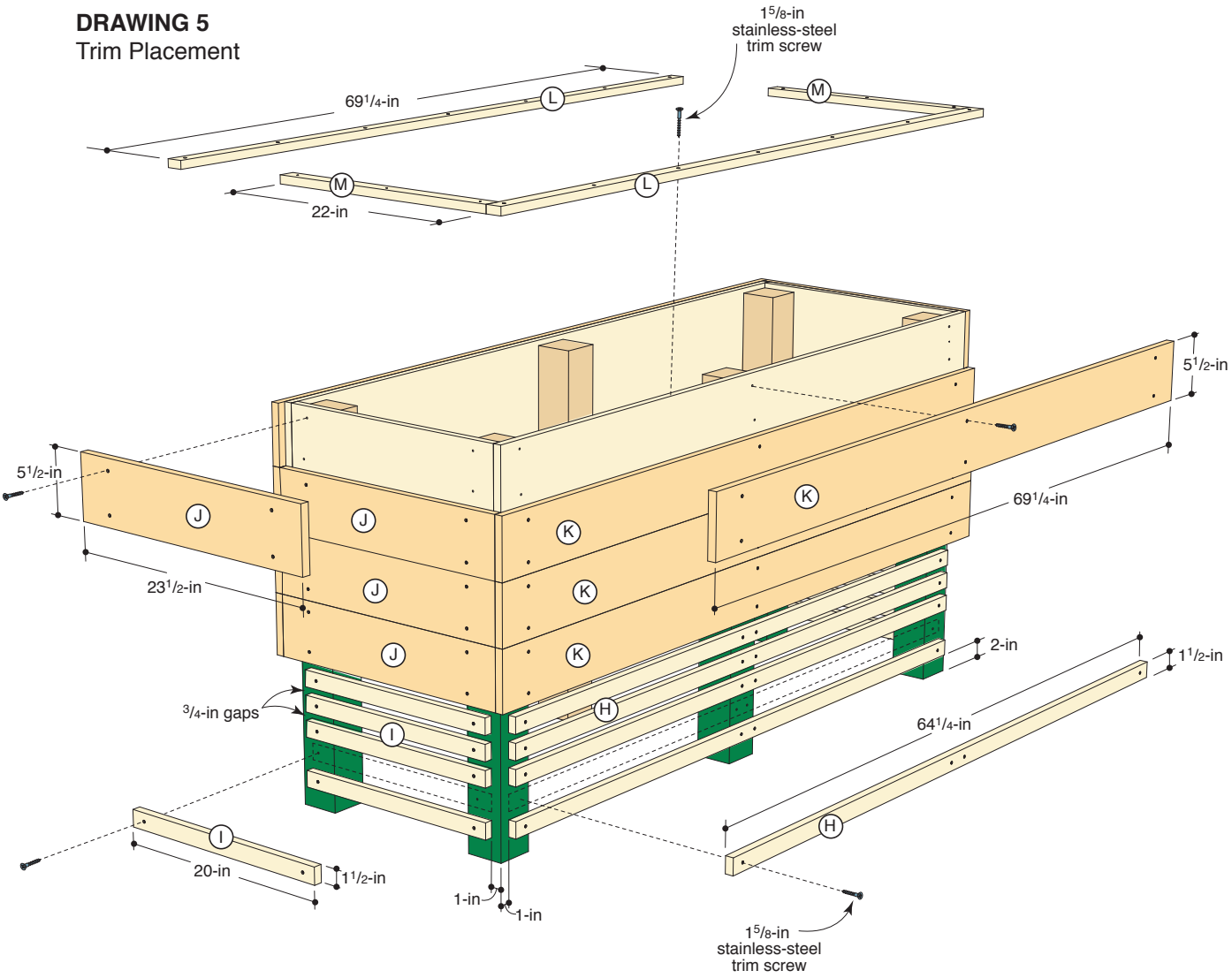

LOWE'S creative ideas FOR HOME AND GARDEN

RAISED PATIO PLANTER PROJECT DIAGRAM

DRAWING 6
Door Assembly
(Left Door Shown)

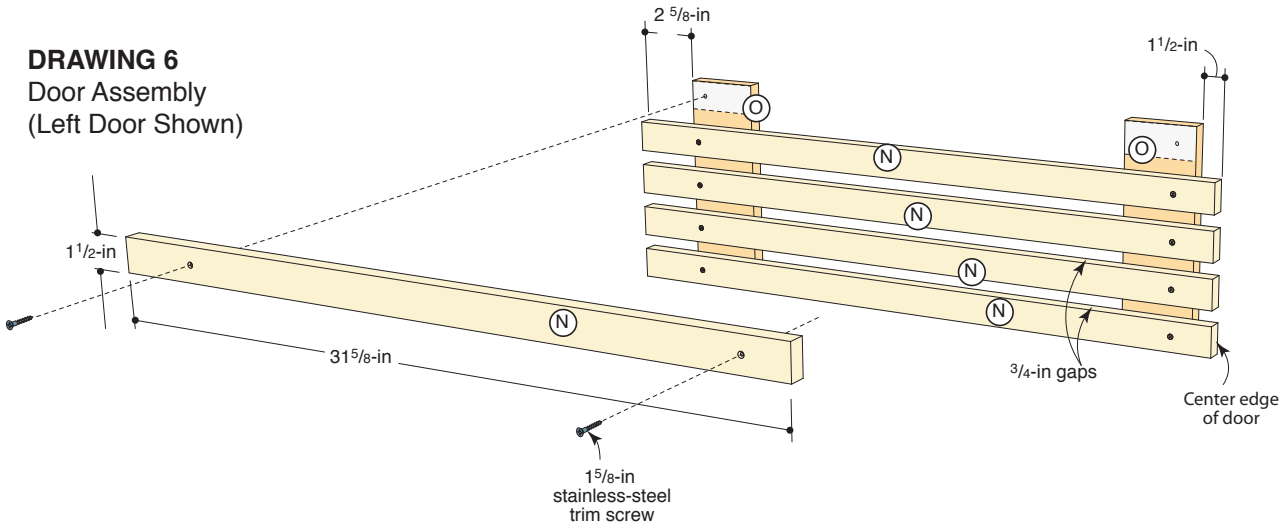

DRAWING 7
Door Installation

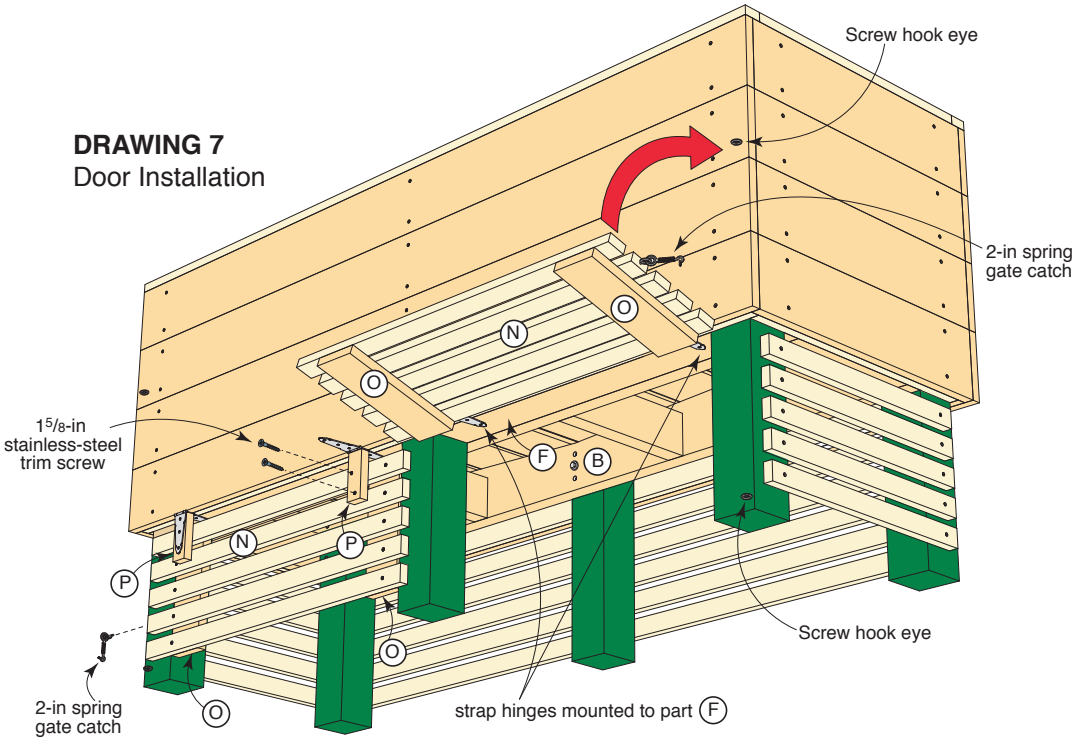

LOWE'S creative ideas FOR HOME AND GARDEN